Computer Architecture
(CSC-3501)
Lecture 8
(12 Feb 2008)

Seung-Jong Park (Jay)
http://www.csc.lsu.edu/~sjpark

Announcement

4-Bit Register (Sequential Circuits)

- This illustration shows a 4-bit register co nsisting of D flip-flops. You will usually se e its block diagram (below) instead.

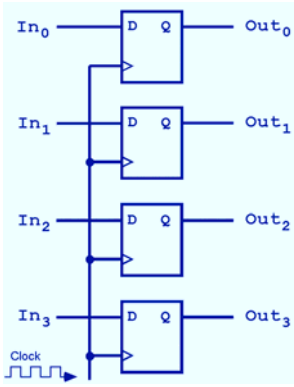

4 X 3 Memory

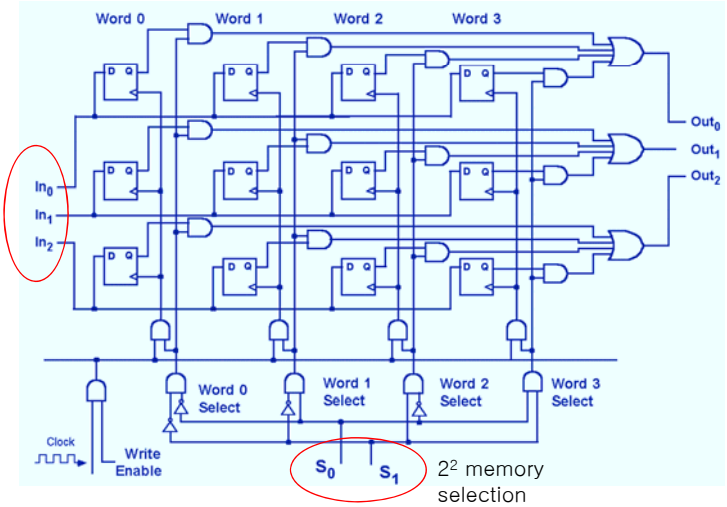

4-Bit Synchronous Counter

- A binary counter is another example of a sequential circuit.
- The low-order bit is complemented at each clock pulse.
- Whenever it changes from 0 to 1, the next bit is complemented, and so on through the other flip-flops.

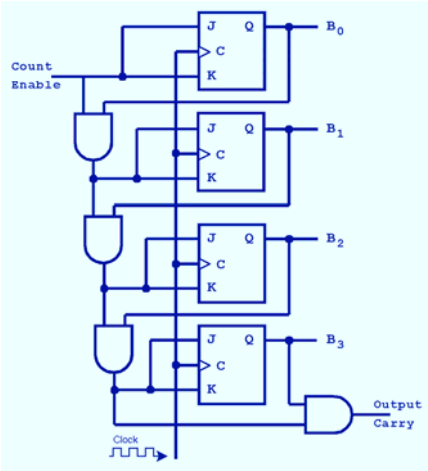

Finite State Machines

- The behavior of sequential circuits can be expressed using characteristic tables or finite state machines (FSMs).
  - FSMs consist of a set of nodes that hold the states of the machine and a set of arcs that connect the states.
- Moore and Mealy machines are two types of FSMs that are equivalent.
  - They differ only in how they express the outputs of the machine.
- Moore machines place outputs on each node, while Mealy machines present their outputs on the transitions.

Moore vs. Mealy

- The behavior of a JK flop-flop is depicted below by a Moore m achine (left) and a Mealy machine (right).
- Although the behavior of Moore and Mealy machines is identi cal, their implementations differ.

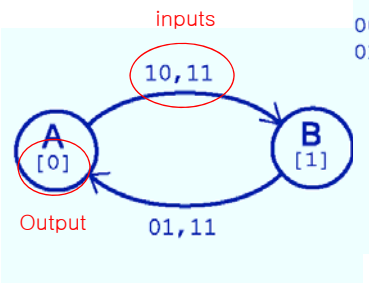

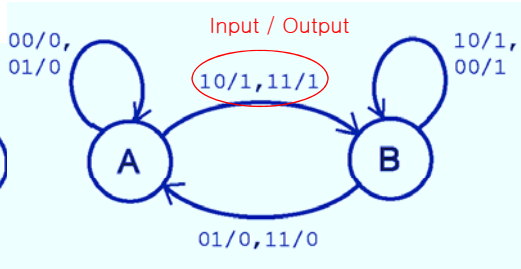

Moore Machine

- J-K Flip Flop

J	K	Q(t+1)
0	0	Q(t) (no change)
0	1	0 (reset to 0)
1	0	1 (set to 1)
1	1	$\bar{Q}$(t)

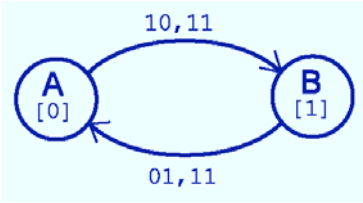

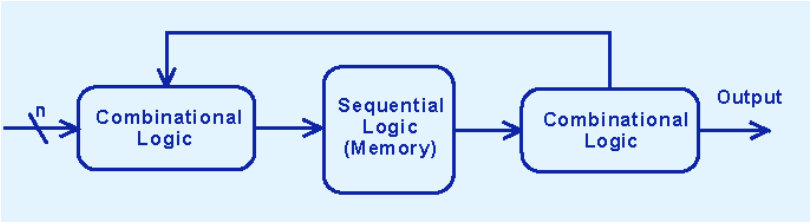
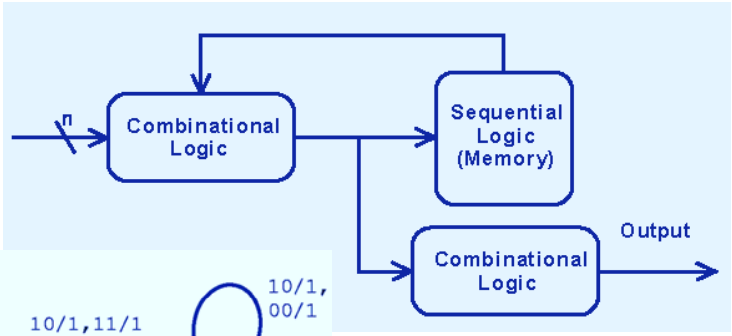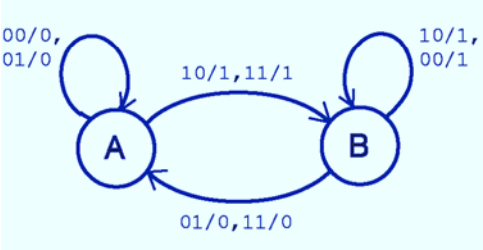
Mealy Machine